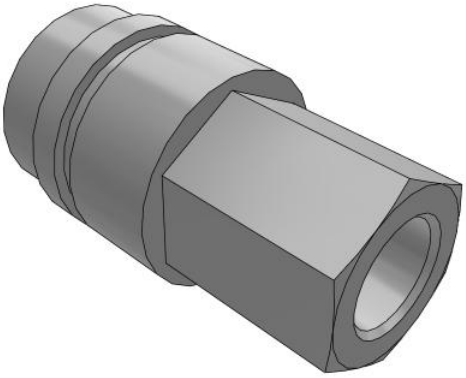

KK*S-*F, S-Couplers, Female Thread

KK6S-03F

Datasheet

General series information

- Female Thread.
- Body size: M5, 1/8, 1/4, 1/2.
- Applicable Port Size: M5, Rc1/8, Rc1/4, Rc3/8, Rc1/2.

Standard specifications

Body Size	6 (1/2)
Piping Port Size	Rc 3/8
Pressure medium	Air, Water
Maximum operating pressure	1.0 MPa
Minimum operating pressure	0 kPa
Proof pressure	1.5 MPa
Maximum ambient temperature	60 °C / 40 °C for Water
Minimum ambient temperature	-5 °C (with no freezing) / 5 °C for Water
Effective Area	82 mm²
Sealing principle	Electroless nickel plated (copper-free application), With male thread sealant

Specifications are subject to change without prior notice and any obligation on the part of the manufacturer.

SMC CORPORATION Zuazobidea 14, 01012, Vitoria-Gasteiz, Álava +34 945184100 +34 945184126 www.smc.eu support.marketingeurope@smc.com

Dimensions

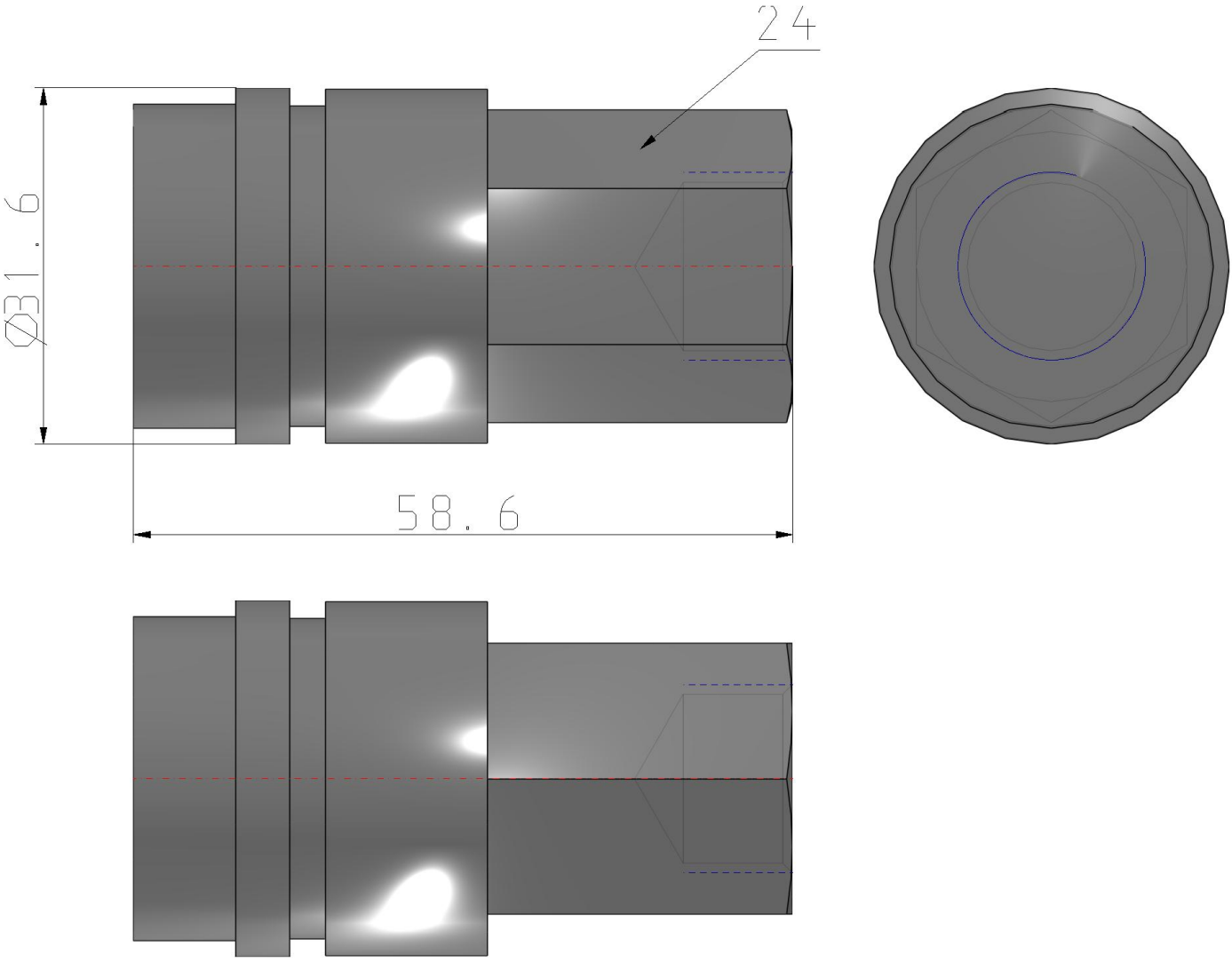

Specifications are subject to change without prior notice and any obligation on the part of the manufacturer.

SMC CORPORATION Zuazobidea 14, 01012, Vitoria-Gasteiz, Álava +34 945184100 +34 945184126 www.smc.eu support.marketingeurope@smc.com

Additional information

Catalogue KK-C_EU.pdf

Specifications are subject to change without prior notice and any obligation on the part of the manufacturer.

SMC CORPORATION Zuazobidea 14, 01012, Vitoria-Gasteiz, Álava +34 945184100 +34 945184126 www.smc.eu support.marketingeurope@smc.com