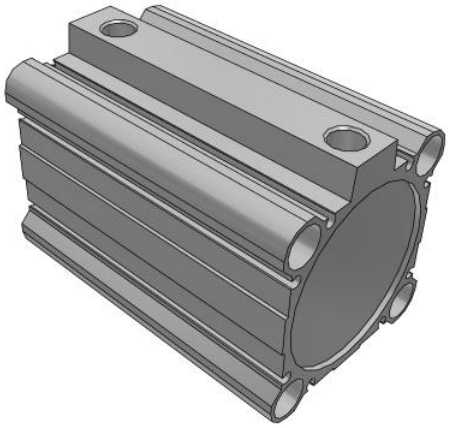

C(D)Q2, Compact Cylinder, Double Acting, Single Rod w/Auto Switch Mounting Groove

CDQ2B63-75DMZ

-

- Double acting, single rod, compact cylinder
- Bore sizes (mm): 12, 16, 20, 25, 32, 40, 50, 63, 80, 100
- Standard stroke range (mm): 5 to 100
- Port threads: M (12 to 25 bore); Rc, NPT or G (32 to 100 bore)
- Can mount small auto switches on 4 surfaces.

-

Magnet	D (Built-in)
Mounting	B (Through Hole [Standard])
Type	Standard
Bore Size	Ø63 mm
Port Thread Type	Rc
Lube-retainer	Without Stable Lubrication Function
Stroke	75
Body Option	M [Rod End Male Thread]
Auto Switch Groove	None, also for 12-25 Bore w/o Magnet
Mounting Bolt	None
Rod End Bracket	None
Auto Switch	No Switch
Lead Wire or Prewired Connector	Z (5 m)
Number	2 pcs.
Rod End Options	None
Temperature Resistance	None
Low Speed	None
Made of Stainless Steel	None
Fluororubber Seal	None

-	Compressed air

-

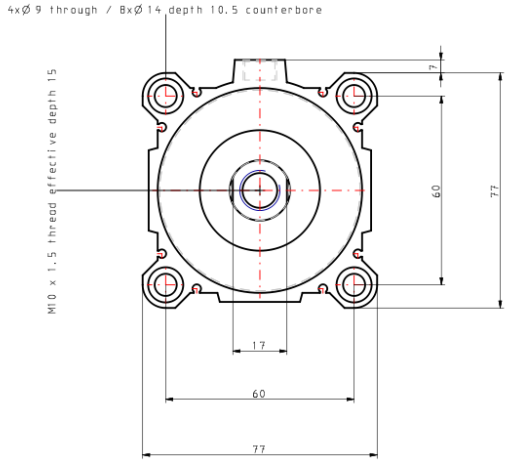
4xØ 9 through / BxØ 14 depth 10.5 counterbore
M10 x 1.5 thread effective depth 15
7
60
77
17
60
77

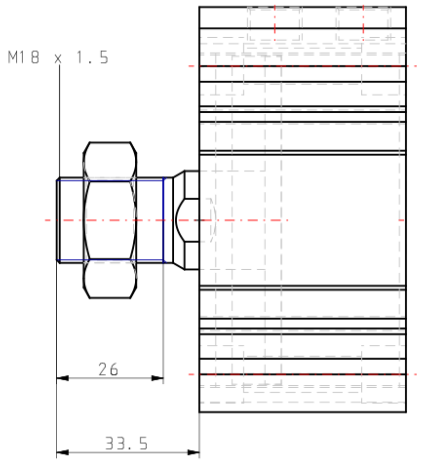
M18 x 1.5
26
33.5

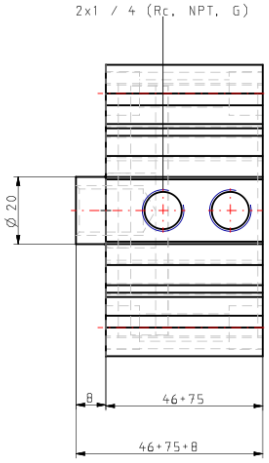
2x1 / 4 (Rc, NPT, G)
Ø 20
8
46+75
46+75+8

-

- CQ2-Z-B_EU.pdf