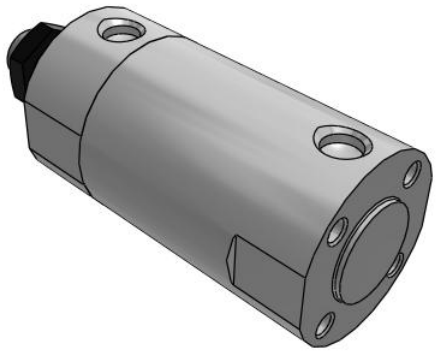

C(D)G3 Air Cylinder, Double Acting, Single Rod, Short Type

CG3BN50-25

Datasheet

- Standard: double acting single rod
- Bore sizes (mm): 20, 25, 32, 40, 50, 63, 80, & 100
- Strokes from 25mm through 300mm
- Mounts: basic, foot, front or rear flange, clevis
- Variety of switches and a variety of lead wire lengths

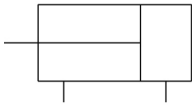

Double-acting, single-rod cylinder

Standard specifications

Magnet	None
Mounting	B (Basic)
Bore Size	50mm
Stroke	25
Rod End Thread	Male Thread
Auto Switch	No Switch
Lead Wire or Prewired Connector	0.5m (Or None in the Case of No Switch)
Number	2 pcs. (Or None in the Case of No Switch)
Pressure medium	Air
Maximum temperature of pressure medium	70 °C
Maximum operating pressure	0.7 MPa
Minimum operating pressure	0.05 MPa
Proof pressure	1.0 MPa
Maximum ambient temperature	70 °C
Minimum ambient temperature	–10 °C
Mode of operation of drive	Double acting
Maximum piston speed	1000 mm/s
Geometric form of the piston rod	Single rod
Minimum piston speed	50 mm/s

Specifications are subject to change without prior notice and any obligation on the part of the manufacturer.

SMC CORPORATION Zuazobidea 14, 01012, Vitoria-Gasteiz, Álava +34 945184100 +34 945184126 www.smc.eu emcmarketing@smc.smces.es

Allowable kinetic energy	1.4 J
Lubrication	Not required (non-lube)
Stroke length tolerance	Up to 300 mm st +1.4 0 mm
Weight	0.755 Kg

Specifications are subject to change without prior notice and any obligation on the part of the manufacturer.

SMC CORPORATION Zuazobidea 14, 01012, Vitoria-Gasteiz, Álava +34 945184100 +34 945184126 www.smc.eu emcmarketing@smc.smces.es

Dimensions

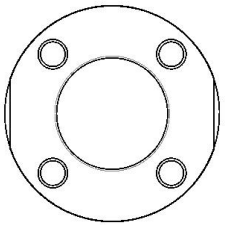

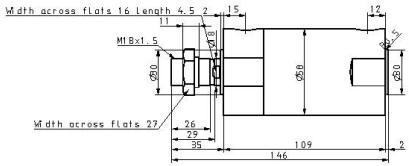

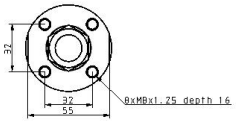

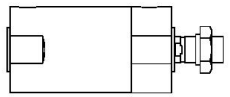

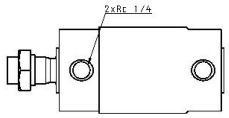

Specifications are subject to change without prior notice and any obligation on the part of the manufacturer.

SMC CORPORATION Zuazobidea 14, 01012, Vitoria-Gasteiz, Álava +34 945184100 +34 945184126 www.smc.eu emcmarketing@smc.smces.es

Constructions

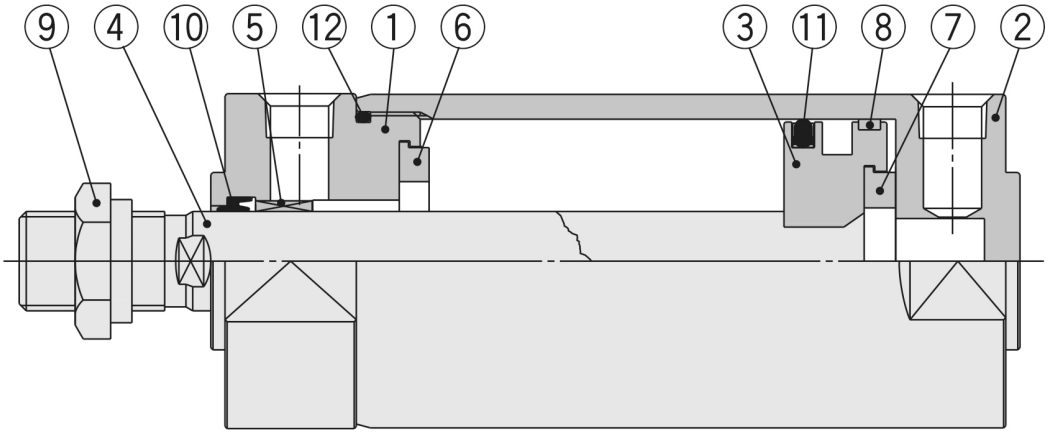

Component Parts

No.	Description	Material	Note
1	**Rod cover**	Aluminium alloy	Hard anodised
2	**Tube cover**	Aluminium alloy	Hard anodised
3	**Piston**	Aluminium alloy	Chromated
4	**Piston rod**	Iron*	Hard chrome plated*
5	**Bushing**	Copper alloy	
6	**Bumper A**	Urethane	
7	**Bumper B**	Urethane	
8	**Wear ring**	Resin	
9	**Rod end nut**	Iron	Nickel plated
10	**Rod seal**	NBR	
11	**Piston seal**	NBR	
12	**Tube gasket**	NBR	

Specifications are subject to change without prior notice and any obligation on the part of the manufacturer.

SMC CORPORATION Zuazobidea 14, 01012, Vitoria-Gasteiz, Álava +34 945184100 +34 945184126 www.smc.eu emcmarketing@smc.smces.es

Additional information

Catalogue CG3-B_EU.pdf

Specifications are subject to change without prior notice and any obligation on the part of the manufacturer.

SMC CORPORATION Zuazobidea 14, 01012, Vitoria-Gasteiz, Álava +34 945184100 +34 945184126 www.smc.eu emcmarketing@smc.smces.es