Cejn Pressure Gauges - Panel Mounting Female Thread

Part No.	Dial Size	Units	Weight [kg]	A	B	C	D	E	F	J	K	L	N
199404373	Ø150	bar and psi	1,85	24	50	33	149,5	165	69	192	5	178	17

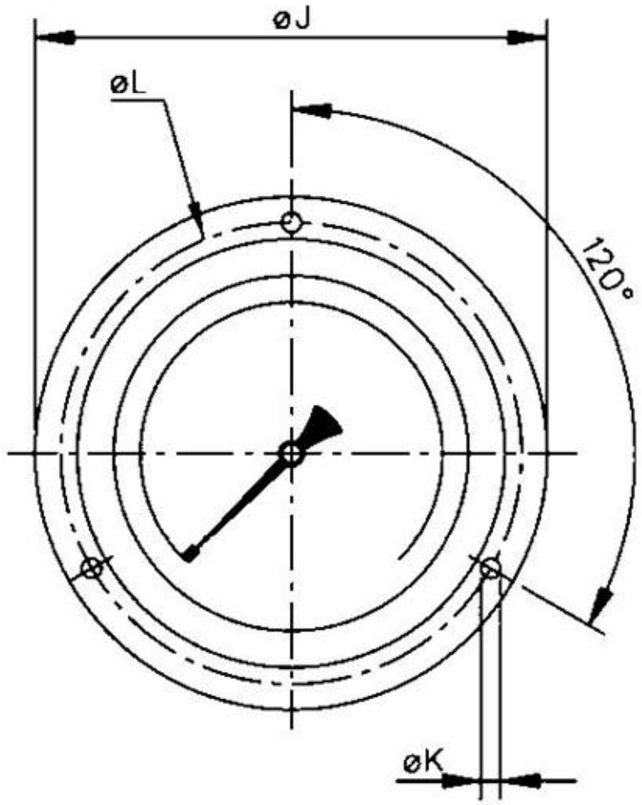

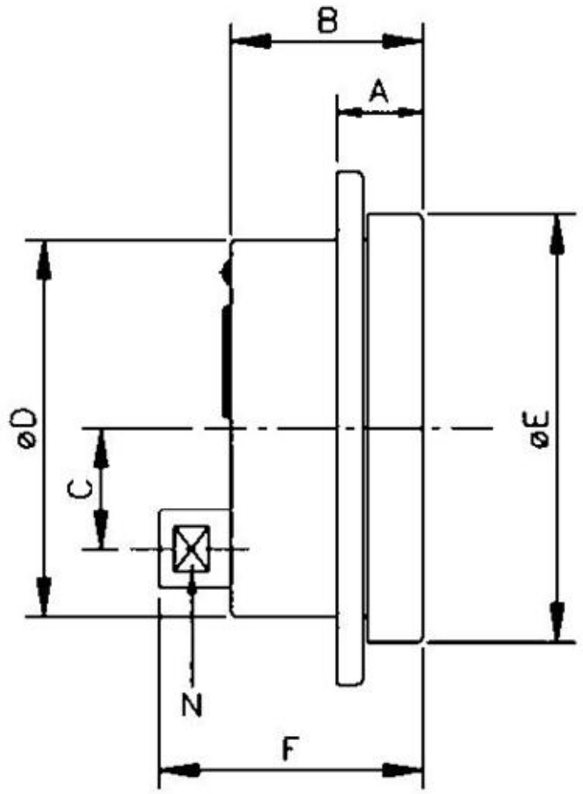

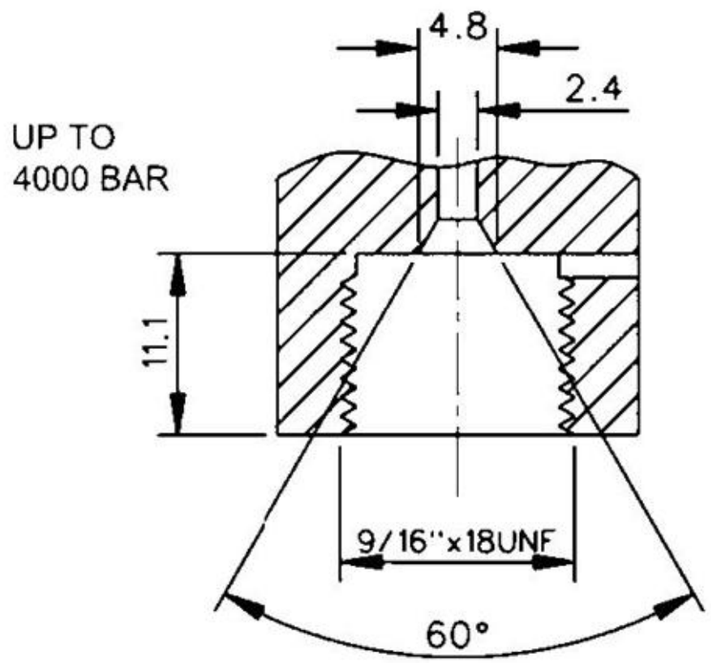

Technical Data

Harmonised Standards:	EN 837, PED 2014/68/EU.
Range:	3000 bar (WP 2000 bar).
Max rec. WP:	Steady max 75% FSD, pulsating max 60% FSD.
Over Pressure:	Safe to 10% FSD for a short period only.
Logotype:	Cejn Blue.
Protection Class:	IP 65 (EN 60529).
Liquid:	Filled with 98% glycerine.
Accuracy:	Ø100±1% of FSD.
Temperatur Range:	Ambient: 0 to 60°C glycerine filled case, Process: 0 to 65°C glycerine filled case, Thermal drift from 20°C: ±0,4% / 10°C.
Material:	Stainless steel construction, white one side aluminium dial, black aluminium pointer, window of polycarbonate.

*FSD (Full Scale Deflection).

Scale	Drawn	Checked	Appr.	ECO	Date
	CABANLA	EP	JW	11914	2018-09-11

Assembly Drawing	Drawing No.	Issue	Sheet
	509404373	AA	1 /(1)

This document must not be copied, either completely or in part, without permission. Any infringement will have legal consequences © All rights reserved

A3