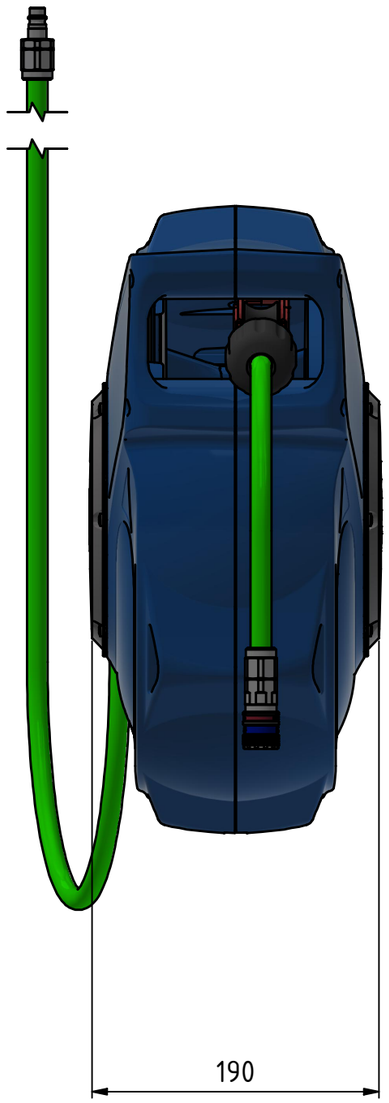

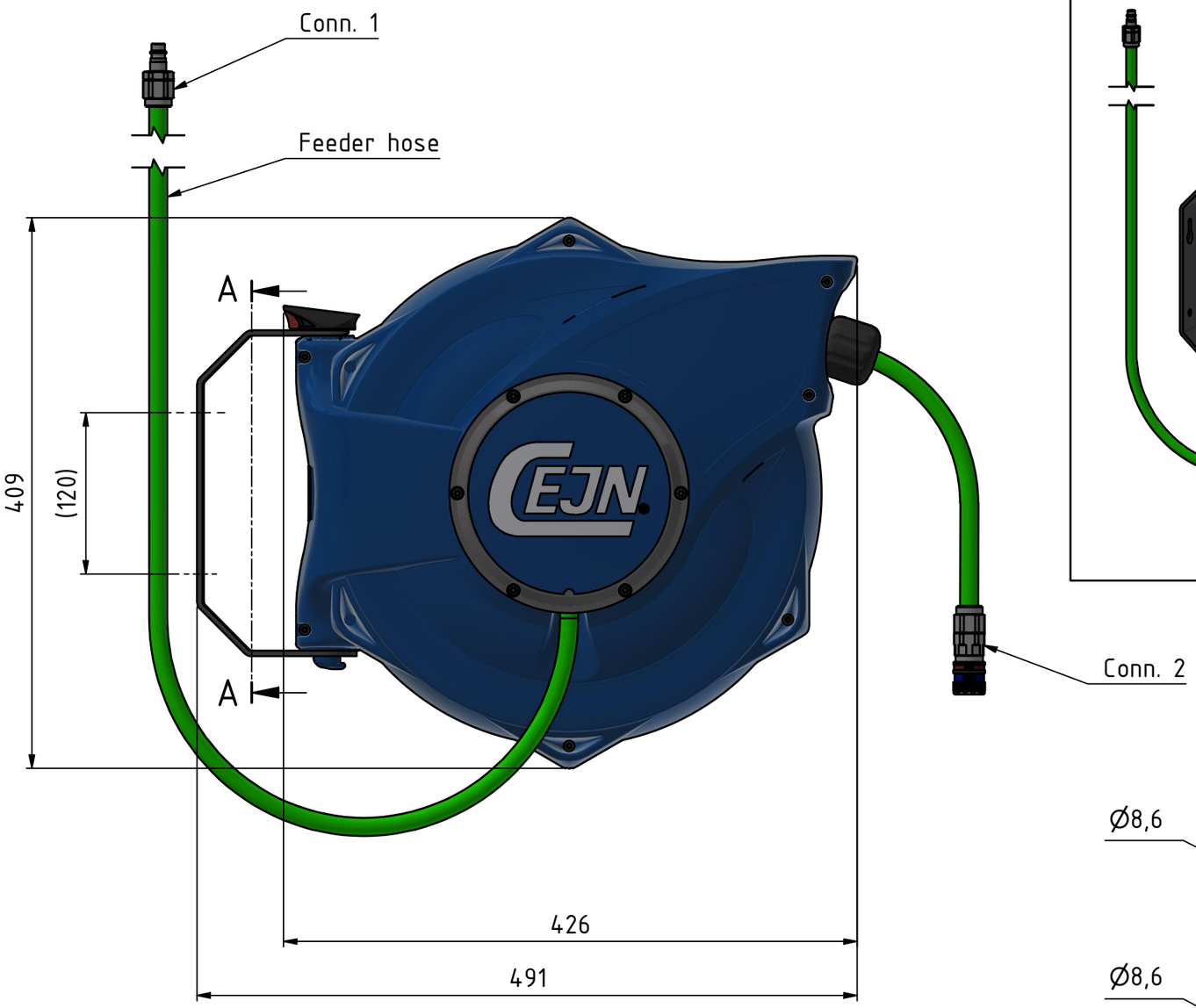

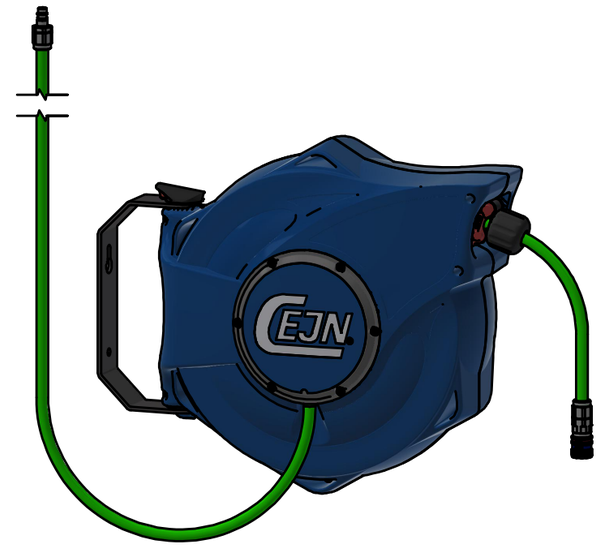

1 : 7

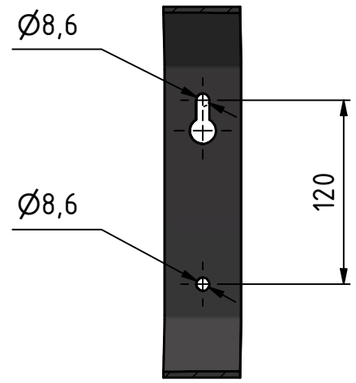

A-A

Product No.	199112168 - Medium Reel Hi-vis
Hose dim. (ID x OD):	9,5x13,5 mm
Hose length:	14 m
Feeder hose length:	1,5 m
Hose material:	Braided PUR (ester based)
Temperature range:	-20°C - +60°C
Connection 1:	320-nipple
Connection 2:	eSafe 320
Sealing material:	NBR
Max WP Connected:	16 bar
Weight:	6,4 kg

Scale	Drawn	Checked	Appr.	ECO	Date
1 : 4	CABLHE	ANLA	JOOL	001594	

Assembly Drawing	Drawing No.	Issue	Sheet
	199112168	D	1 /(1)

A3

This document must not be copied, either completely or in part, without permission. Any infringement will have legal consequences © All rights reserved