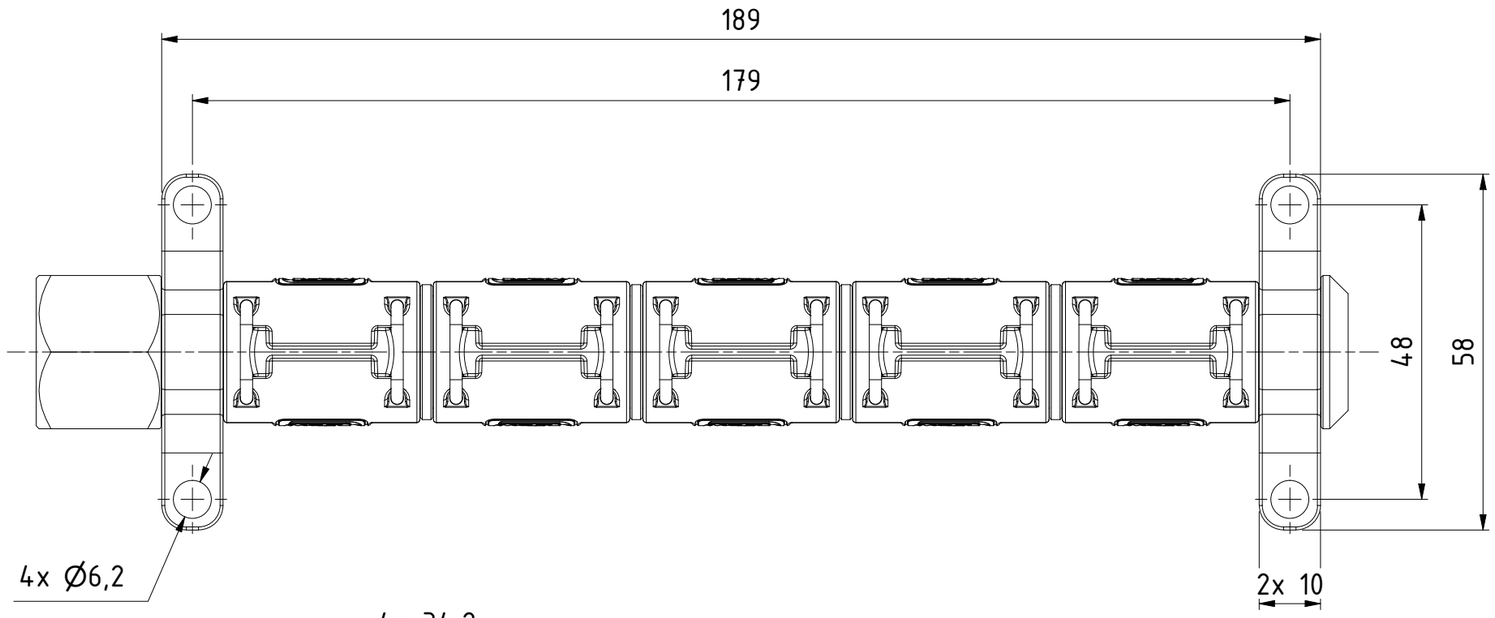


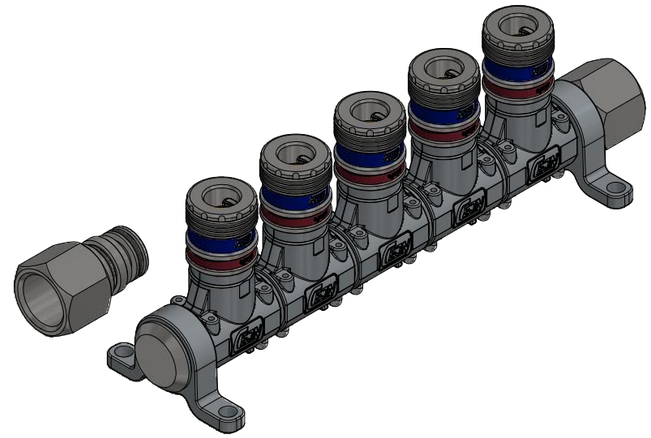

1 : 2

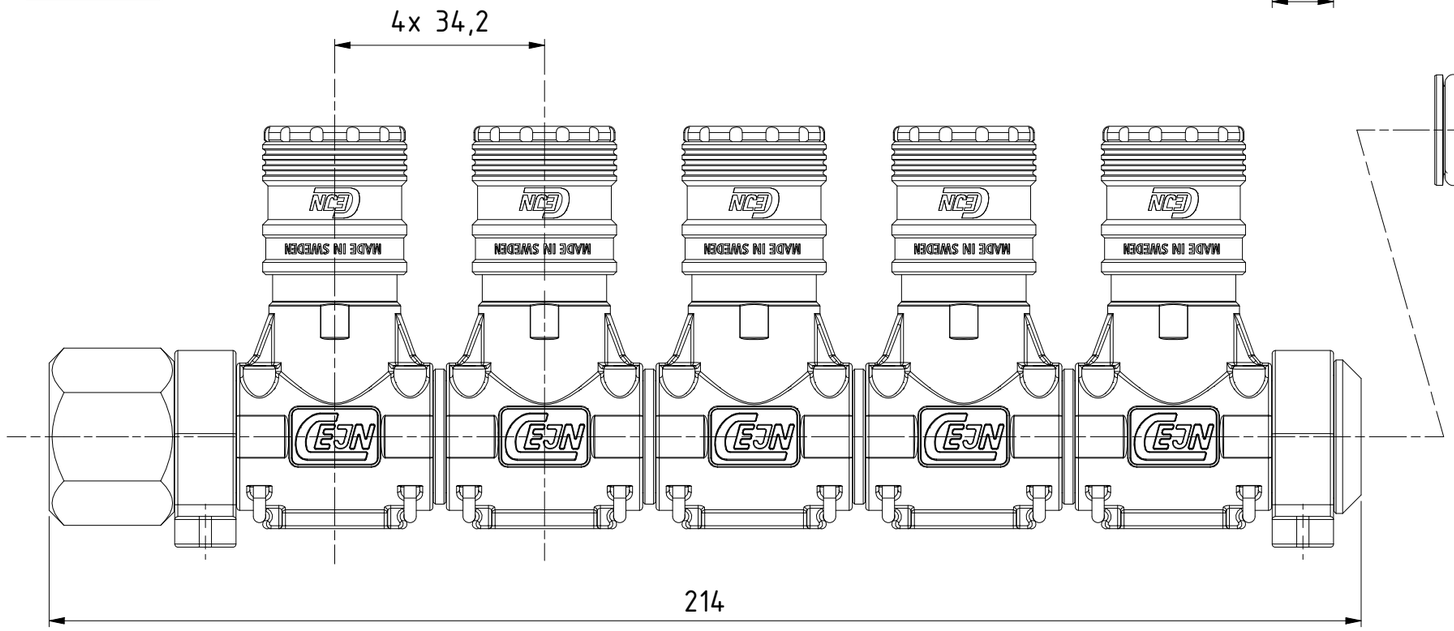


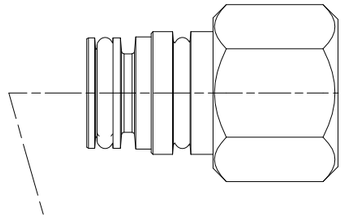

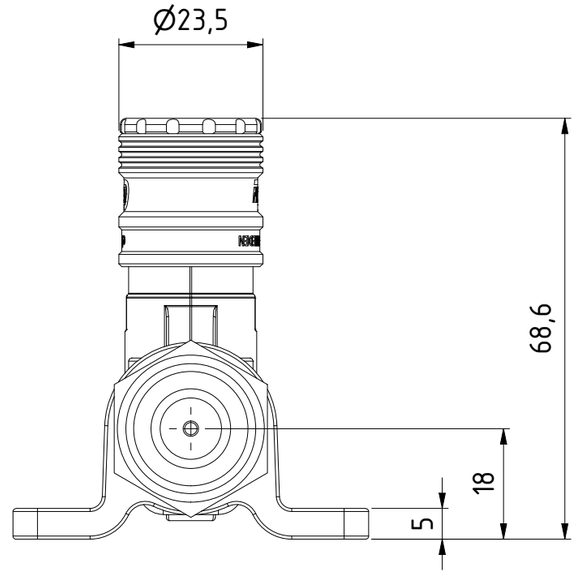


| | |
|---|---|
| Product No. | 199029105 |
| Nominal flow Ø DN: | 5,3 mm |
| Connection Stroke: | 19,5 mm |
| Max WP Connected: | 16 bar |
| Min BP Connected: | 64 bar |
| Temperature range: | -20°C - 100°C |
| Connection: | G 1/2" fem |
| Sealing material: | NBR |
| Hexagon: | 25 |

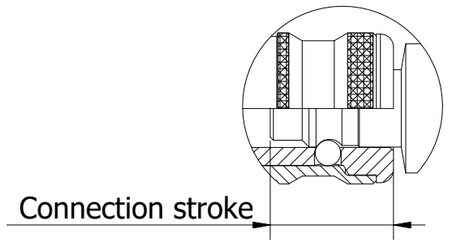


| Scale | Drawn | Checked | Appr. | ECO | Date |
|---|---|---|---|---|---|
| 1 : 1 | MATJOH | ANLA | JOOL | | 2022-08-08 |

| | Drawing No. | Issue | Sheet |
|---|---|---|---|
| Assembly Drawing | 509029105 | AB | 1 /(1 ) |

A3

This document must not be copied, either completely or in part, without permission. Any infringement will have legal consequences © All rights reserved