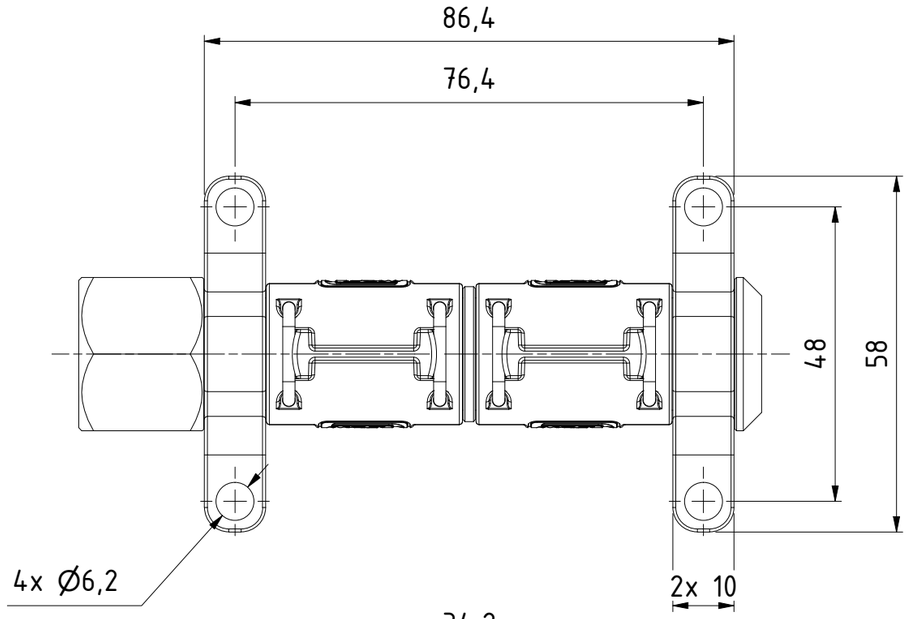

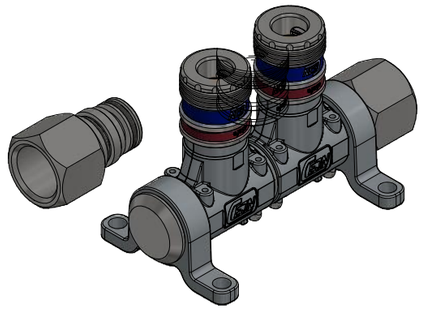

1 : 2

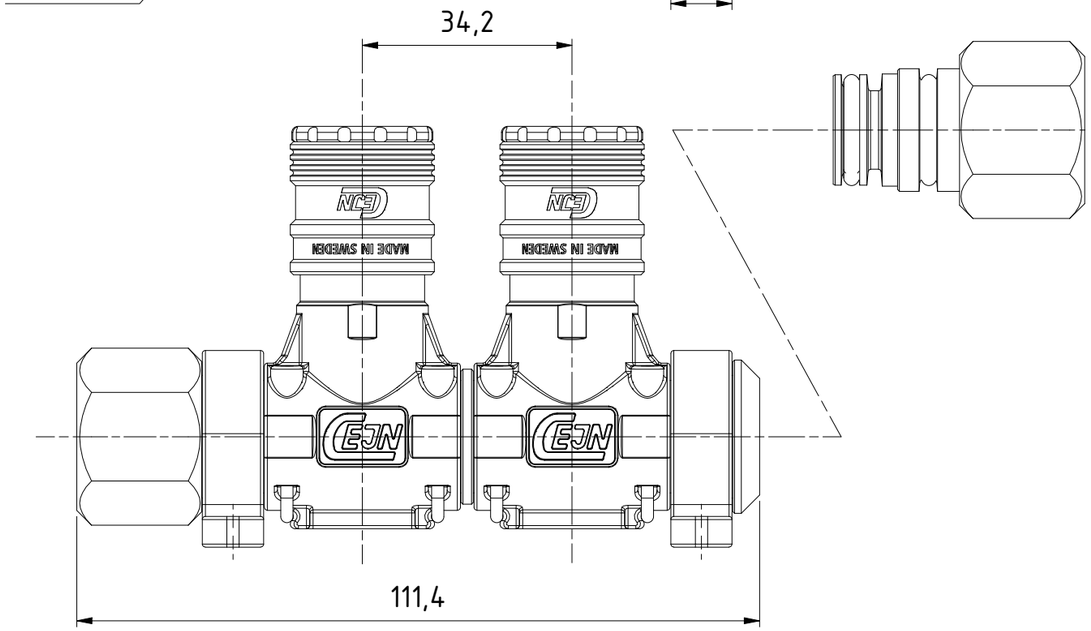

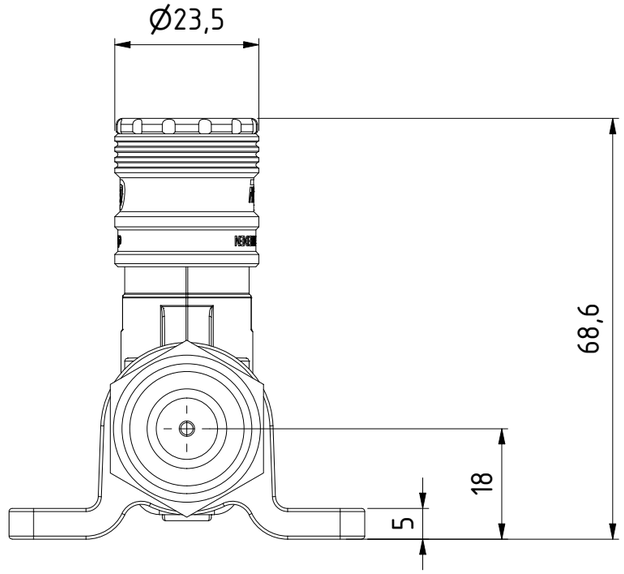

Product No.	199029102
Nominal flow Ø DN:	5,3 mm
Connection Stroke:	19,5 mm
Max WP Connected:	16 bar
Min BP Connected:	64 bar
Temperature range:	-20°C - 100°C
Connection:	G 1/2" fem
Sealing material:	NBR
Hexagon:	25

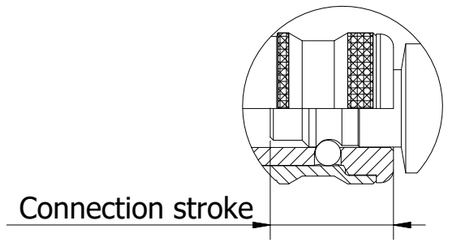

Scale	Drawn	Checked	Appr.	ECO	Date
1 : 1	MATJOH	ANLA	JOOL		2022-08-05

Assembly Drawing	Drawing No.	Issue	Sheet
	509029102	AB	1 /(1)

A3

This document must not be copied, either completely or in part, without permission. Any infringement will have legal consequences © All rights reserved