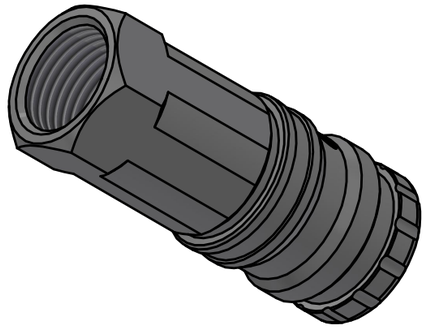

1 : 1

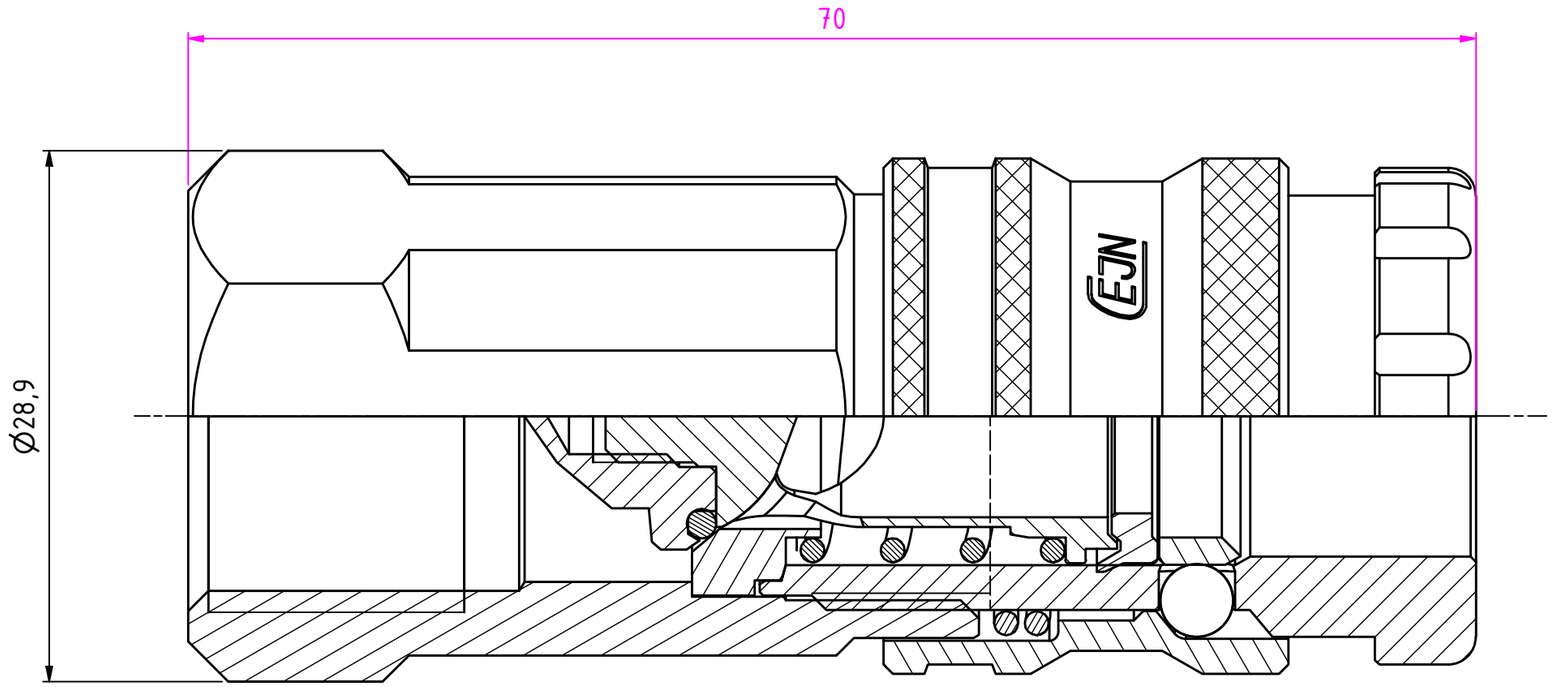

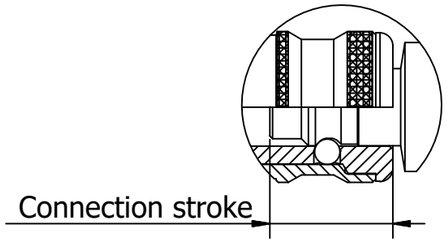

AC

Item	Qty	Description	Material
12	1	Back part	Steel, Zn 8 Silver
11	6	Ball	Stainless steel
10	1	Locking sleeve	Hard.steel, FeNi5b
9	1	Spring	Stainless steel
8	1	Spring	Stainless steel
7	1	Valve nut	Brass
6	1	O-ring	NBR
5	1	Lip Seal	NBR
4	1	Ratchet sleeve	Brass
3	1	Valve seat	Brass
2	1	Valve	Brass
1	1	Front part	Steel, Chem. Ni.

Product No.	104421205
Nominal flow Ø DN:	10.4 mm
Connection Stroke:	22.3 mm
Max WP Connected:	35 bar
Min BP Connected:	140 bar
Temperature range:	-30°C - +100°C
Connection:	G 1/2" Fem
Sealing material:	NBR
Hexagon:	25

Scale	Drawn	Checked	Appr.	ECO	Date
3 : 1	CABANLA	LHE	JOOL	11916	2018-01-10

	Drawing No.	Issue	Sheet
Assembly Drawing	104421205	C	1 /(1)

A3

This document must not be copied, either completely or in part, without permission. Any infringement will have legal consequences © All rights reserved